Full Port Ball Valve w/Square Head Stem & Locking System

cim B12.1

FIPT x FIPT

Applications:

The CIM B12.1 ball valve is manufactured in accordance with EN ISO 9001 and is designed with a tamper resistant locking mechanism. Applications include non-aggressive fluids and gases for residential and commercial plumbing, industrial applications, agricultural systems, waterworks, saturated steam or high temperature hot water services, condensate lines, as well as oil, gasoline and other hydrocarbon services.

Features:

The CIM B12.1 ball valve, which is built from the Cimberio CIM 11 building block, is a full port ball valve built with a heavy pattern body that offers increased thread depth, and includes a unique blast proof/ impact proof 3 part stem design. The CIM B12.1 also features a locking security mechanism that is even tamper resistant to forced opening/closing. The locking mechanism is available in 12 different lock configurations and can be master keyed.

Threading:

NPT threads ANSI B1.20.1.

Size	Fast Order No.	Technical ID No.
1/2"	B12-04	CIMB12-A04LS
3/4"	B12-06	CIMB12-A06LS
1"	B12-07	CIMB12-A07LS
1-1/4"	B12-08	CIMB12-A08LS

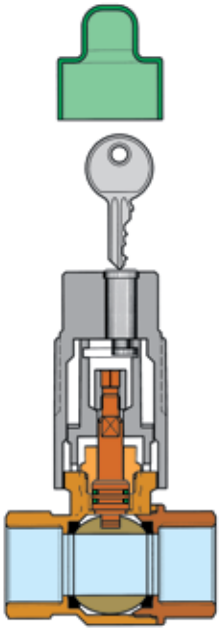

Materials:

- **Body:** Hot Forged Brass ASTM C37700
- **Adaptor:** Hot Forged Brass ASTM C37700
- **Ball:** Brass, Machined to a Micro-Smooth Finish, Hard Chromium Plated
- **Cap Stem:** 36600 Bar Stock
- **Ball Seats:** Conical Rings in P.T.F.E.
- **Stem Seal:** Two O-Rings in FPM.
- **Locking Mechanism:** Hot Forged Brass ASTM C37700
- **Nut:** Self-Locking Type, Steel ANSI C.1008.

All Cimberio valves qualify for the American Recovery and Reinvestment Act and the Buy American Act.

Full Port Ball Valve w/Square Head Stem & Locking System

cim B12.1

FIPT x FIPT

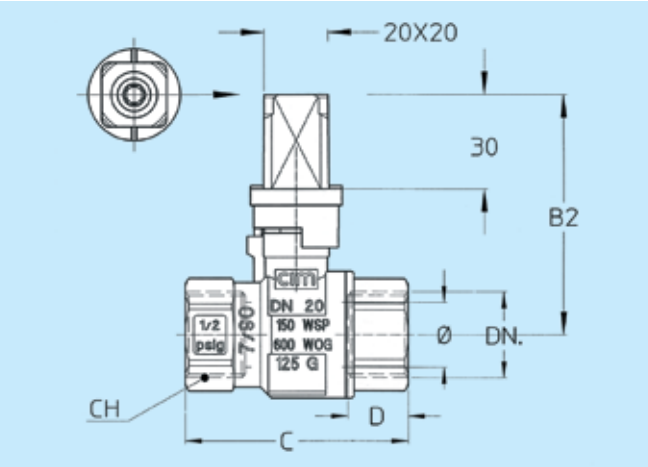

Size Port inch Port mm	1/2" 0.59" 15mm	3/4" 0.79" 20mm	1" 0.98" 25mm	1-1/4" 1.26" 32mm
B1	3-3/4" 95mm	3-15/16" 100.5mm	4-1/8" 105.5mm	4-3/8" 111mm
B2	2-3/4" 70mm	2-15/16" 74.5mm	3-1/16" 78.5mm	3-7/16" 87mm
C	2-7/16" 61mm	2-11/16" 68mm	3-1/4" 82mm	3-5/8" 92mm
D	11/16" 17mm	3/4" 18.5mm	13/16" 21mm	7/8" 22.5mm
CH	1" 25mm	1-1/4" 31mm	1-9/16" 40mm	1-15/16" 49mm
Pounds Grams	1.21 550	1.49 675	2.01 910	2.69 1215

FLOW AND PRESSURE DROP

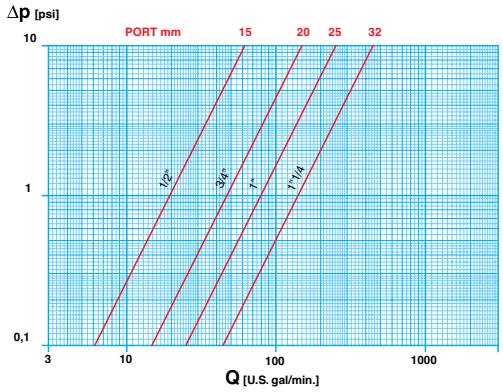

PRESSURE/TEMPERATURE RATINGS

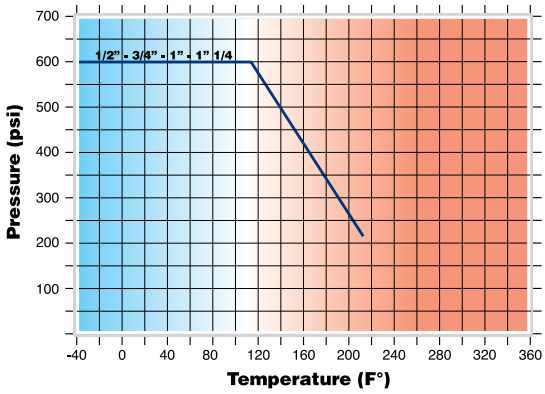

CV CM CS MT

CV: Capacity in "U.S. gal/min" at pressure drop of "1 PSI"

CM: Working Torque in "lb x in"

CS: Starting Torque in "lb x in"

MT: Torque Breaking Point on the Stem in "lb x in"

Element: Water - Temperature: 59.9˚ F

B12.1	SIZE Ø mm Ø inch	1/2" 15 0.59	3/4" 20 0.79	1" 25 0.98	1-1/4" 32 1.26
CV	gal/min	19.7	47.4	78.7	142.3
CM	N x m lb x in	3 27	5 44	6 53	7 62
CS	N x m lb x in	6 53	10 89	12 106	14 124
MT	N x m lb x in	10 89	24 213	24 213	45 399

Working Pressure: 600 PSI

Max. Operating Temperature: Working Limit for Fluids -40˚ F – 212˚ F

Test Pressures: According to ISO 5208

Vacuum: the CIM B12.1 Ball Valves can be used for Vacuum: $2x10^{-5}$ PSI